MagLev Fan Technology
For Harshest Environments

BFS-i06

915 Pa	(3.68 inH_2O)
500 m^3/h	(294 cfm)

No Bearings. No Seals. No Problems.

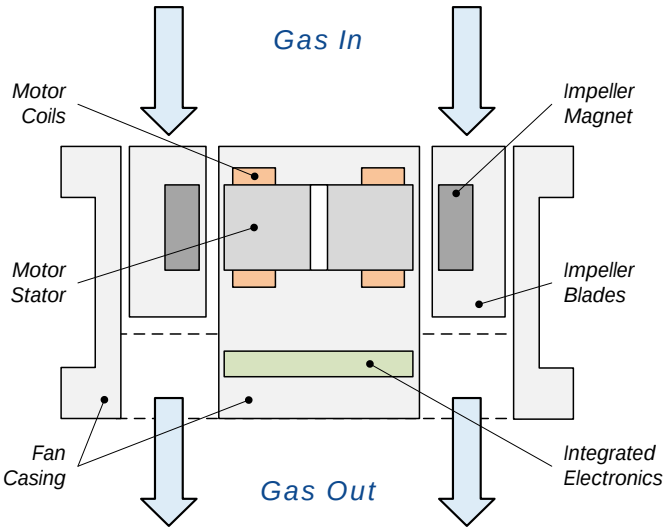

Figure 1: *Schematic of the BFS-i06*

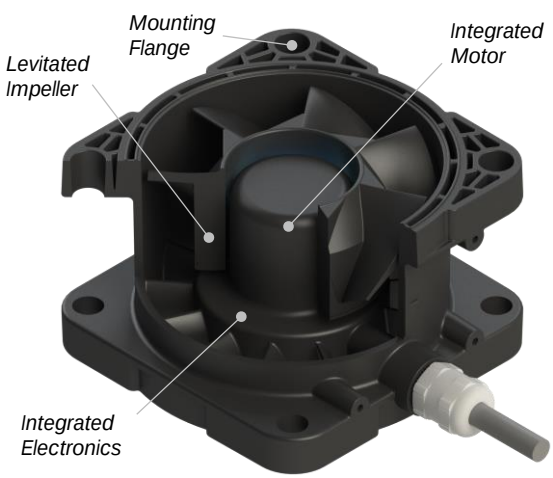

Figure 2: *Components of the BFS-i06*

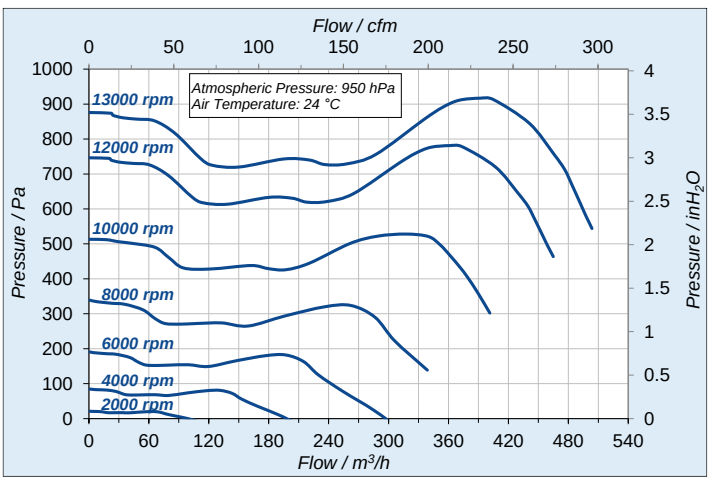

Figure 3: *Pressure/flow curves (typical data for BFS-i06)*

INTRODUCTION

Levitronix® has developed a revolutionary axial fan that has no bearings to wear out or seals to break down.

Based on the principles of magnetic levitation, the fan impeller is suspended and driven contact-free by the magnetic field of the bearingless motor (*Figure 1*).

Both impeller and casing are hermetically encapsulated in chemically resistant and electrically dissipative plastics (*Figure 2*), enabling safe operation in the harshest environments, including explosive atmospheres.

Flow rate, pressure and fan speed are precisely and quickly controlled by the integrated closed-loop controller, with PLC interface or RS485 bus with Modbus protocol.

BFS fans are an ultra-compact and power dense solution with minimal wiring requirements, thanks to high-speed operation and fully integrated motor and electronics.

SYSTEM BENEFITS

- Chemically resistant design for exposure to aggressive media.
- Certified for use in explosive atmospheres.
- Closed-loop flow or pressure control possible with additional sensor.
- Ultra-low particle generation and maintenance due to lack of bearings and dynamic seals.
- Hermetically sealed with single material in media contact - no safety or integrity concerns.
- Inline washdown with aggressive cleaning agents possible, e.g. to remove photo-resist deposits.
- Low vibration due to active unbalance compensation.

APPLICATIONS

- Exhaust control and boosting in semiconductor processing chambers and fabs.
- Gas flow control in coating and baking chambers.
- Flow control in ultra-pure environment.

INSTALLATION

The fans can be adapted to a wide variety of ducts. Multiple fans may be used in series to achieve higher pressure, or in parallel to achieve higher flow rate (*Figure 4*).

The interface panel *FIP-2.1* is available for easy wiring of multiple fans, for example:

- Individual control of up to four fans through a single power and fieldbus connection (*Figure 5*, left).
- Analog synchronization of two or more fans for parallel or serial operation (*Figure 5*, right).

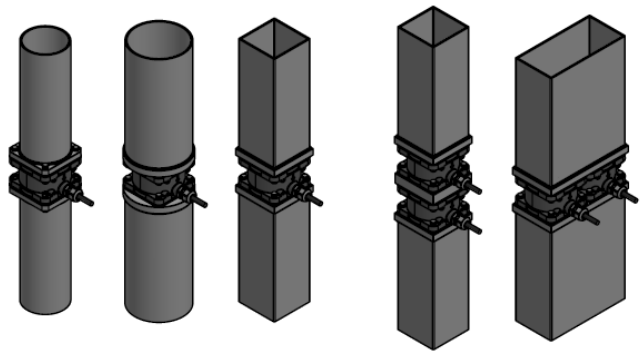

Figure 4: *Example duct configurations*

INTERFACES

Basic control is possible through the PLC interface:

- Speed control with one analog input.
- Closed loop process control with additional flow or pressure sensor on second analog input.
- Monitoring of actual speed or process value.

The RS485 bus offers full functionality including parameter logging, debugging and service, through one of the following means and for several fans at once (*Figure 6*):

- PC (*Levitronix® Service Software*).
- Handheld user panel *LUI-B.1.*
- Fieldbus (Modbus RTU protocol).

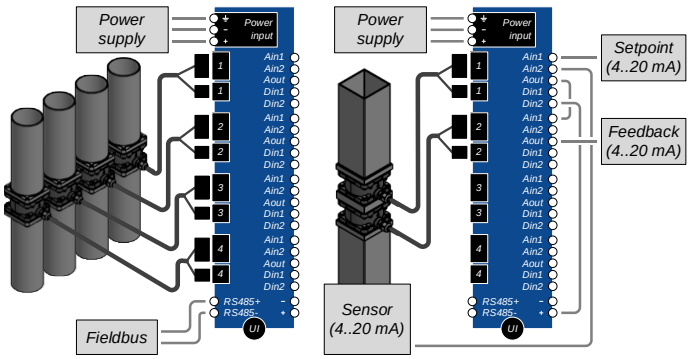

Figure 5: *Example of interface panel setups*

ATEX / IECEX RATING

The *BFS-i06.1* is ATEX / IECEx certified for installation in ATEX Zone 1 for gas or Zone 21 for dust. An Ex conform solution is needed for the motor cables to leave the ATEX area (e.g. a certified cable sealing, as in *Table 2, Pos. 10*).

- Ex marking of fan:

  II 2G Ex h mb IIC T6 Gb
  II 2D Ex h mb IIIC T85 °C Db

- Max. allowed gas temperature is 40°C.
- Gas group IIC with T6 rating: all gases are allowed.

System configurations with interfacing options and accessories are shown in *Figure 7* and *Figure 8*.

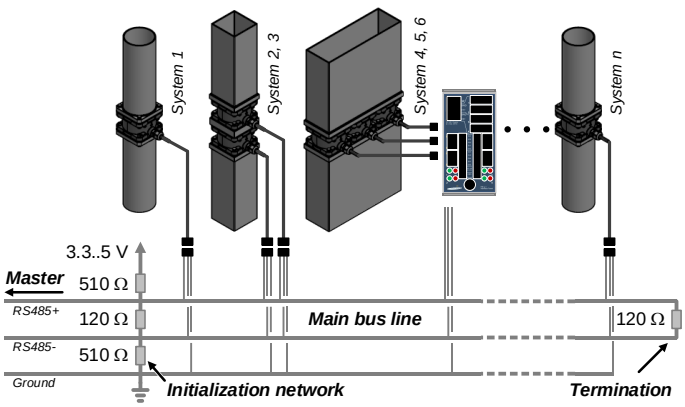

Figure 6: *Multi-fan array on RS485 fieldbus*

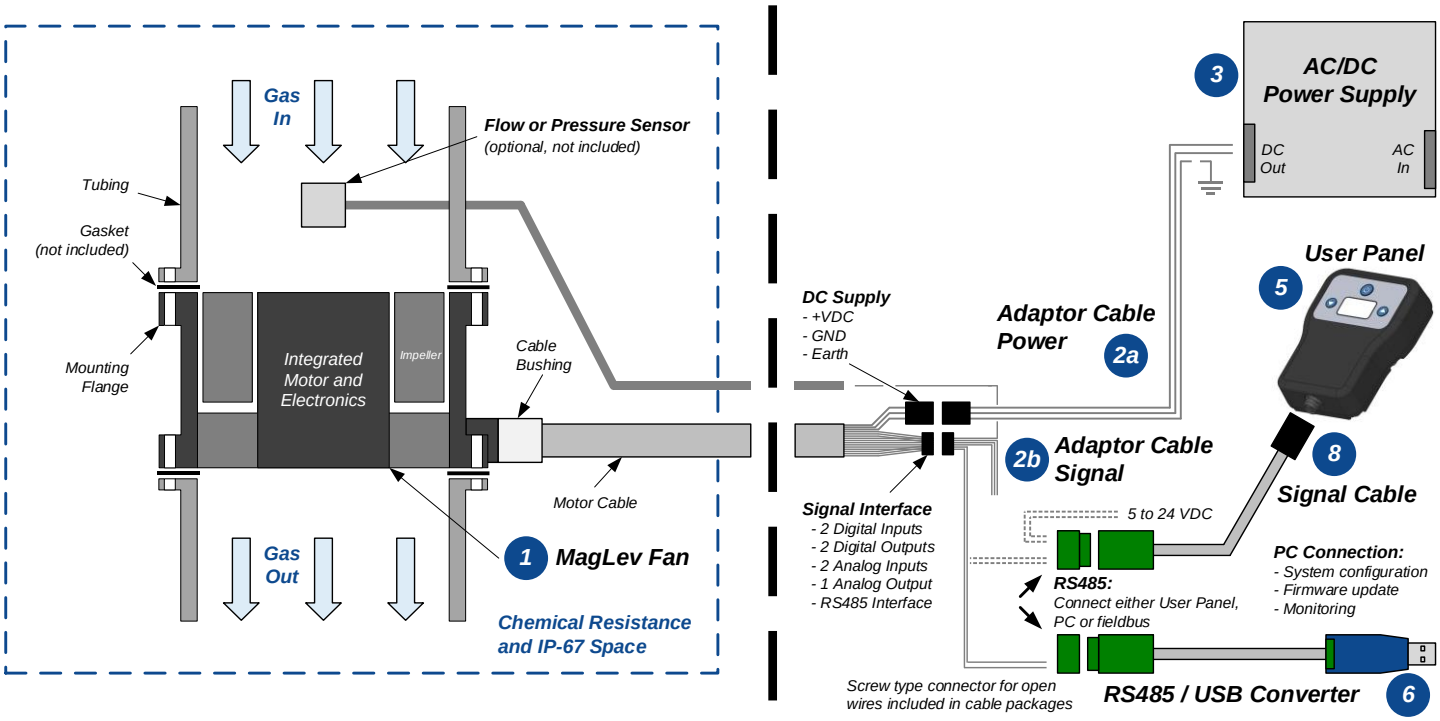

Figure 7: Standard system configuration (left) and possible connection with open wire adaptor (right)
Note: Connection options (right of dashed line) are interchangeable with Figure 8

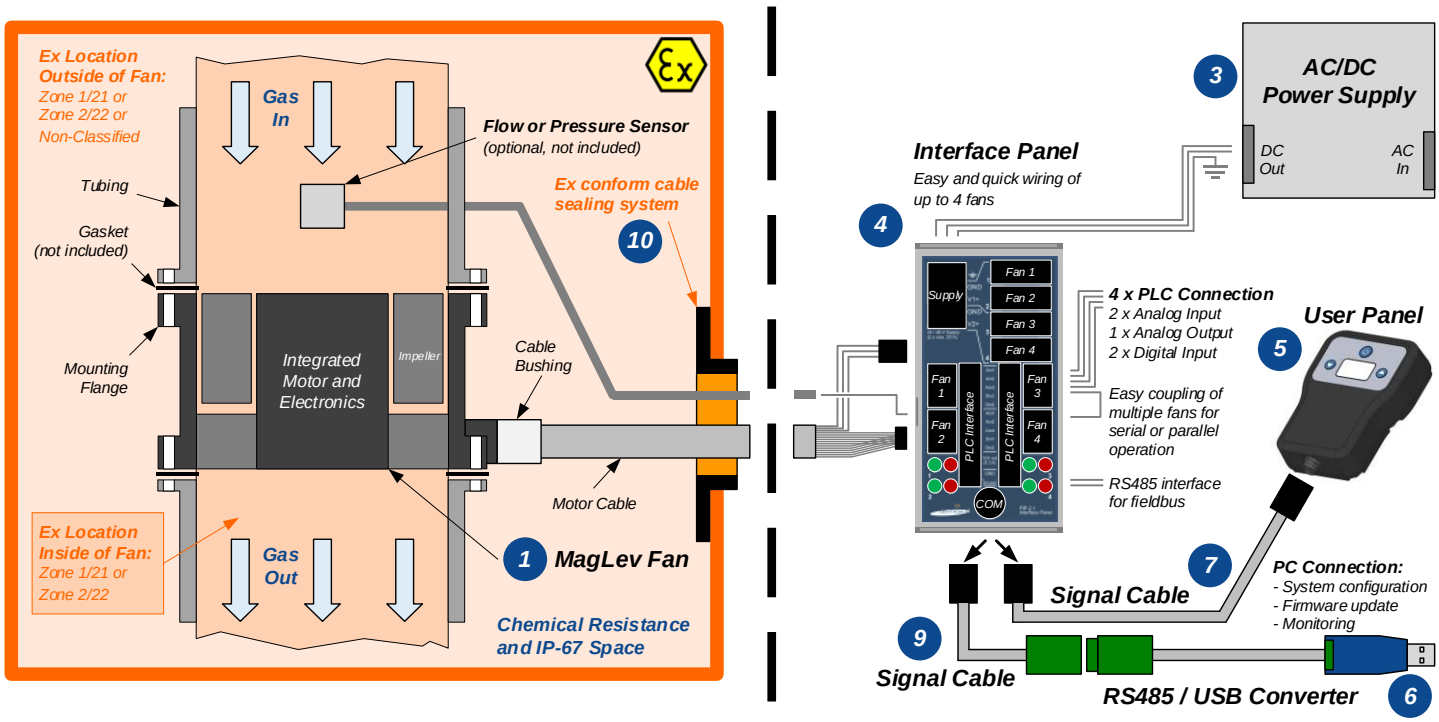

Figure 8: ATEX/IECEx system configuration (left) and possible connection with interface panel (right)
Note: Connection options (right of dashed line) are interchangeable with Figure 7

DIMENSIONS OF MAIN COMPONENTS

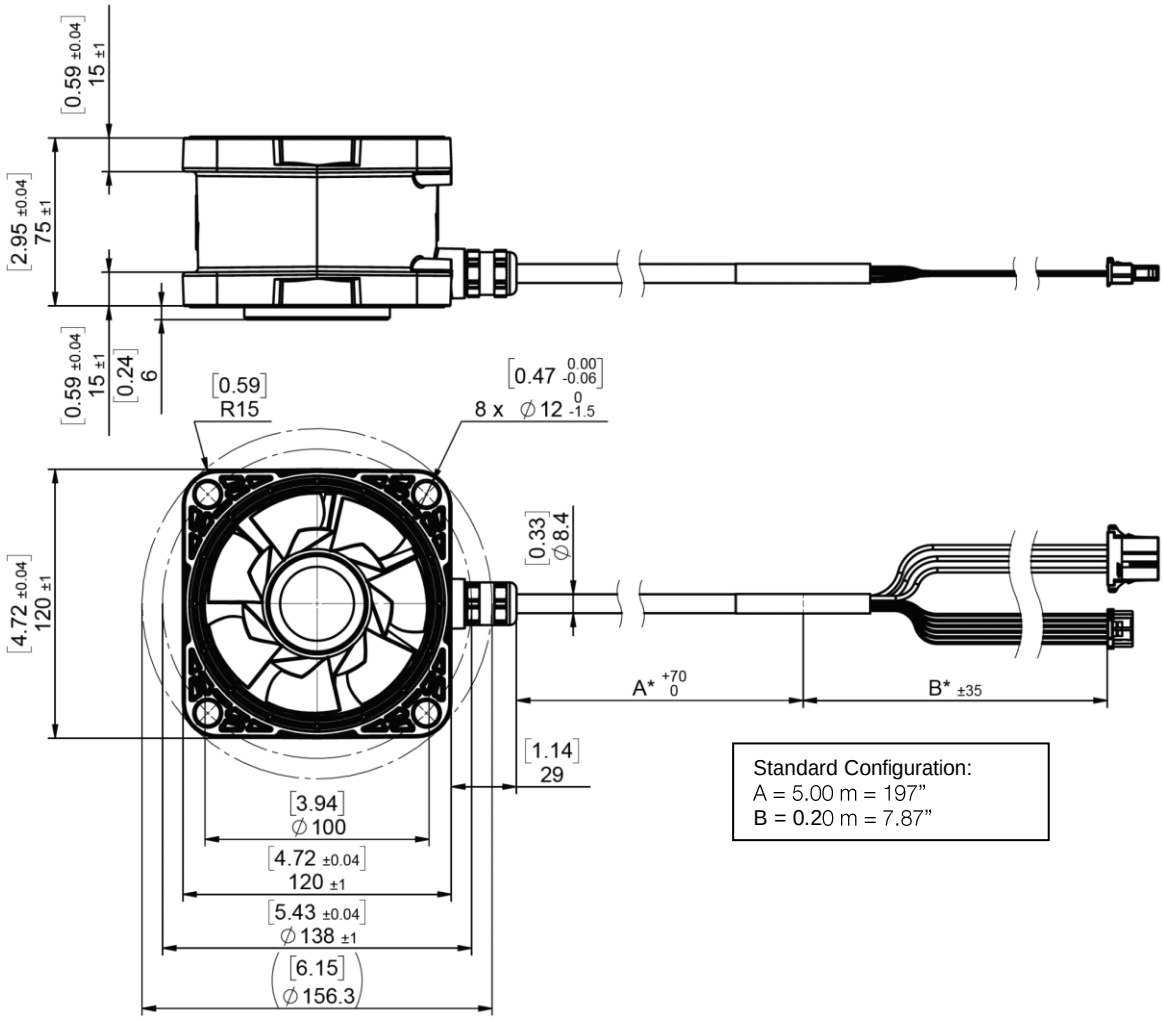

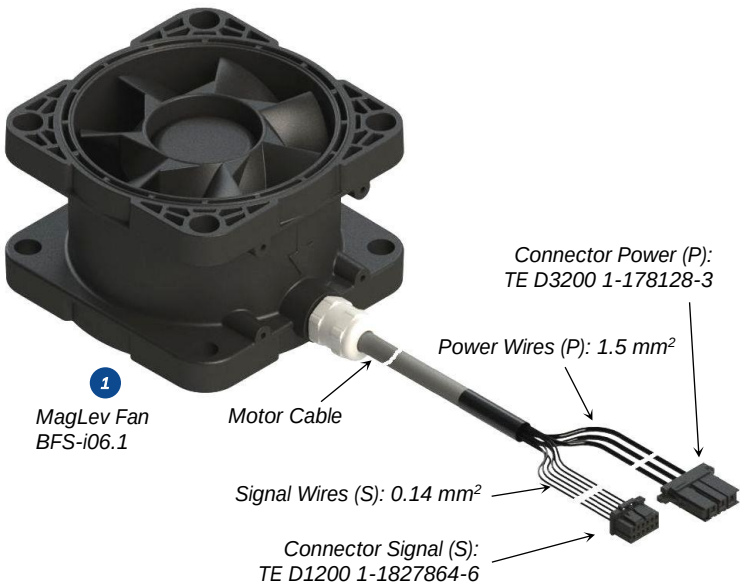

	Pin	Wire Color	Designation	Description	Hardware Specification
P	1	Red	Power +	Supply	Voltage: 48 VDC
	2	Black	Power -		Power- internally connected to cable shield
	3	Yellow-green	GND / Earth	Cable shield	To be connected to earth
S	B6	Violet	Analog input 1 (current input)	Setpoint speed or process value	Analog current input: 4 – 20 mA (240 Ω shunt input, no galvanic isolation)
	B1	Gray-pink	Analog input 2 (current input)	Actual process value (pressure or flow sensor)	Analog current input: 4 – 20 mA (240 Ω shunt input, no galvanic isolation)
	B2	Blue	Analog input ground	Reference for analog inputs 1 and 2	
	B4	Pink	Digital input 1	Default: not used	Galvanic separation with optocoupler
	B5	Gray	Digital input 2	Process mode	2.2 kΩ input resistance, 5 – 24 V for active input
	B3	Yellow	Digital input ground	Reference for digital inputs 1 and 2	
	A1	Blue-red	Analog output (current output)	Actual speed or process value	Analog current output: 4 – 20 mA (≤ 450 Ω shunt, no galvanic isolation) Ground wire is reference.
	A2	Brown	Digital output 1	Status	Open drain, max. 24 V, ≤ 200 mA
	A3	White	Digital output 2	Error	Ground wire is reference
	A5	Brown-green	RS485 +	Field Bus	Modbus protocol
	A6	White-yellow	RS485 -		
	A4	White-green	Ground	Reference for analog and digital outputs	Internally connected to power- and cable shield

Figure 9: *Basic dimensions and interface description of BFS-i06 fan*
Note: Non-tolerated dimensions are for reference only, dimensions in [inch] are rounded only

ORDER INFORMATION

Pos.	Component	Article Name	Article #	Characteristics	Value / Feature
1	Bearingless Fan (ATEX / IECEx)	BFS-i06.1 (5 m) BFS-i06.1-22 (2.2 m)	100-10184 100-10185	Voltage, Power Input	48 V DC ±10%, 240 W (Option: 24 V DC ±5%, 65 W, with reduced max. speed of 8000 rpm)
				Max. Pressure, Max. Flow	915 Pa (3.68 inH_2O), 500 m^3/h (294 cfm)
				Point of Max. Power	850 Pa, 440 m^3/h, 13000 rpm (optional 24 V supply voltage: 320 Pa, 260 m^3/h, 8000 rpm)
				ATEX / IECEx Marking	CE 1258 UKCA 2503 Ex KCs II 2G Ex h mb IIC T6 Gb II 2D Ex h mb IIIC T85 °C Db Ambient and gas temperature range 0 to 40 °C
				IP Rating	IP67
				Electrical Interfaces	PLC with: 2 analog inputs 4-20 mA; 1 analog output 4-20 mA; 2 digital inputs 0-24 V (optocoupler); 2 digital outputs 0-24 V / 100 mA (open drain) RS485 interface, Modbus protocol (extended control or service through fieldbus or Levitronix® Service Software)
				Standard Firmware	V3.48
				Mechanical Interface	Flange on both motor sides with mounting holes 4 x Ø 12 mm on diameter 138 mm. Flange inside Ø 100 mm, outside 120 mm x 120 mm
				Cable Length	5/2.2 m + 0.2/0.8 m wires with TE connectors for power and PLC signals
				Materials	Polypropylene, electrically conductive, flame retardant Cable: PVC jacket, PVDF bushing
				Weight	1.4 kg, 3.1 lb (for 5 m version)

Table 1: *Specification of standard configuration*

Pos.	Component	Article Name	Article #	Characteristics	Value / Feature
2	Adaptor Cable Set	Set of ICP-5.1-03 and ICS-5.1-03	100-91510		See 2a and 2b
2a	Adaptor Cable Power	ICP-5.1-03 (0.3 m) ICP-5.1-15 (1.5 m)	190-10463 190-10490	Specifications	PVC insulated open wires (3 x 1.5 mm2) with TE connector
				Purpose	Connection of fan cable to DC power supply
2b	Adaptor Cable Signals	ICS-5.1-03 (0.3m) ICS-5.1-15 (1.5 m)	190-10464 190-10491	Specifications	PVC insulated open wires (12 x 0.14 mm2) with TE connector
				Purpose	Connection of fan cable to PLC signals and RS485 fieldbus
3	AC/DC Power Supply	TIB 240-148 [1] (Traco)	100-40032	Voltage Output / Input	48 V DC / 85 – 264 V AC
				Power Output	240 W (360 W for 4 s)
				Certification / Standards	CB, UL, CSA, Semi F47
4	Interface Panel	FIP-2.1 [1]	100-91659	Structure/Design	DIN-rail mountable PCB with connectors for: - 4 x Signal for BFS-i06 fans (TE Connectivity 1-1827875-6) - 4 x Power for BFS-i06 fans (TE Connectivity 1-178136-3) - 1 x Power supply connector (Wago 2624-3105) - 22 x PLC push-in (analog/digital inputs/outputs, RS485) - 1 x Circular COM for LUI-B.1 or RS485 to USB Converter
				Purpose	Easy wiring of power and PLC signals for up to four BFS-i06 fans
5	User Panel	LUI-B.1-06	100-30549	Specifications	Firmware A8.00, IP65, 5 to 24 V supply voltage
				Purpose	Control of fan via handheld device with display and menu buttons
6	USB-RS485 Adaptor	YN-485I-TR	100-30392	Structure/Design	USB connector (A) with termination resistor and cable (2 m) with connector pair (B and C) for external RS485 wire connection. Magnetically isolated. Included is a USB space saver cable (D)
				Purpose	Control or service of fan via USB port of a PC with Levitronix® Service Software
7	IP Adaptor Cable Signal 6 Wires	ICS-1.1-10 (1 m) ICS-1.1-30 (3 m)	190-10344 190-10345	Specifications	PVC jacket, connectors: circular to circular type
				Purpose	Connection of user panel (LUI-B.1) to interface panel (FIP-2.1)
8	IP Adaptor Cable Signal 6 Wires	ICS-1.2-10 (1 m) ICS-1.2-50 (5 m)	190-10440 190-10346	Specifications	PVC jacket, connectors: circular type to screw type
				Purpose	Connection of user panel (LUI-B.1) to adaptor cable (ICS-5.1) and 5 to 24 V supply
9	IP Adaptor Cable Signal 6 Wires	ICS-1.3-50 (5 m)	190-10389	Specifications	PVC jacket, connectors: circular type to screw type
				Purpose	Connection of interface panel (FIP-2.1) to USB adaptor (YN-485I-TR)
10	ATEX Cable Sealing System	ACS-A.1 (Roxtec)	100-90292	Materials	Sleeve (A) and Gasket (B): Stainless Steel, EPDM Frame(C) and 2x Cable Module (D): Roxylon (EPDM Rubber)
				Note	Lubricant (E) and measurement plates (F) are included

Table 2: *Specification of standard accessories*

Note 1: See user manual for a list of tested power supplies for one or multiple fans

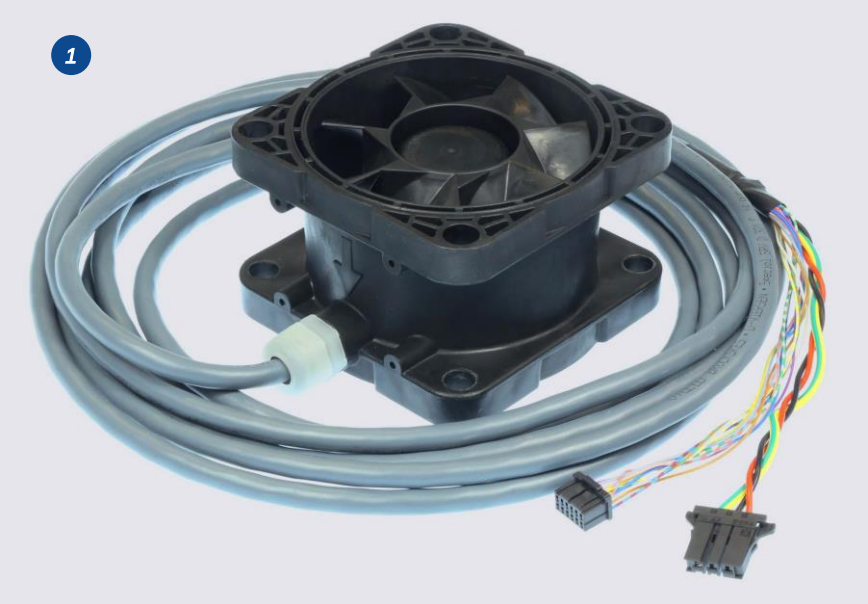

Figure 10: *Standard fan*

Figure 11*: Accessories*

LEVITRONIX® THE COMPANY

Levitronix® is the world-wide leader in magnetically levitated bearingless motor technology. *Levitronix®* was the first company to introduce bearingless motor technology to the Semiconductor, Medical and Life Science markets. The company is ISO 9001 certified. Production and quality control facilities are located in Switzerland. In addition, *Levitronix®* is committed to bring other highly innovative products like the *LEVIFLOW®* flowmeter series to the market.

Headquarter and European Contact

Levitronix GmbH
Bändliweg 30
CH-8048 Zurich
Switzerland

Phone: +41 44 974 4000
E-Mail: salesEurope@levitronix.com

US Contact

Levitronix Technologies LLC
10 Speen Street, Suite 102
Framingham, Massachusetts 01701
USA

Phone: +1 508 861 3800
E-Mail: salesUS@levitronix.com

Japan Contact

Levitronix Japan K.K.
Wing Eight 5floor, 4-16-4
Asakusabashi, Taito-ku
Tokyo, 111-0053 Japan

Phone: +81 3 5823 4193
E-Mail: salesJapan@levitronix.com

Taiwan Contact

Levitronix Taiwan
5F, No. 251, Dong Sec. 1,
Guangming 6th Rd., Chu Pei City,
Hsin-Chu 302, Taiwan, R.O.C.

Phone: +886 3 657 6209
E-Mail: salesAsia@levitronix.com

This document and its content are the property of Levitronix® and shall not be reproduced, distributed, disclosed or used for manufacturing or sale of Levitronix® products without the expressed written consent of Levitronix®.