# *High Purity Pumping and Mixing with One Single Device!*

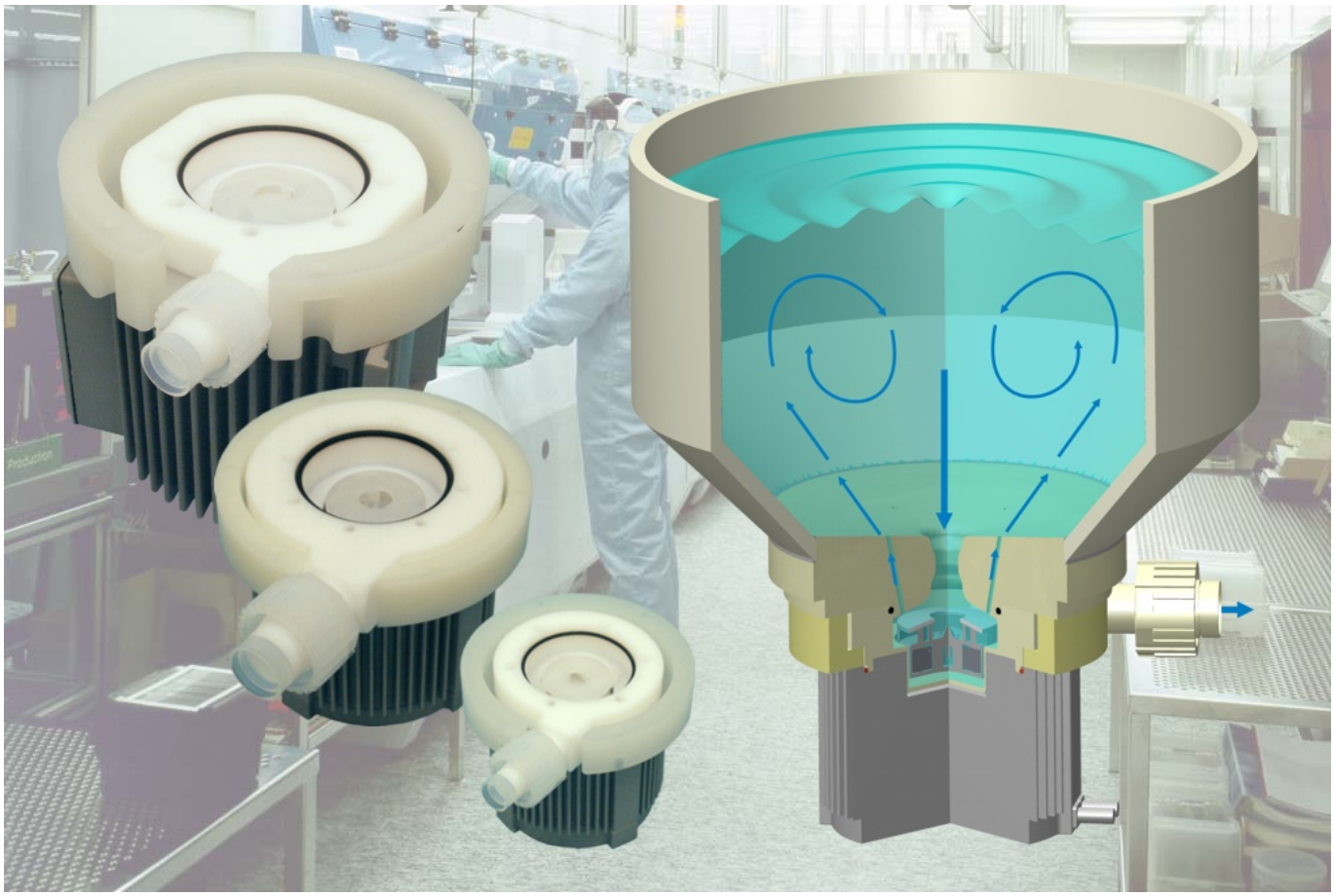

# *No Seals, No Bearings, No Particle Contamination!*

| *Pump Mixer System* | ***PTM-1*** | ***PTM-3*** | ***PTM-4*** |
|---|---|---|---|
| *Max. Pressure* | *1.6 bar (23.2 psi)* | *2 bar (29 psi)* | *3.9 bar (56.5 psi)* |
| *Max. Flow* | *17 lpm (4.5 gpm)* | *75 lpm (19.8 gpm)* | *140 lpm (37 gpm)* |
| *For Tank Size* | *100 Liter (26.5 gallons)* | *200 Liter (53 gallons)* | *400 Liter (106 gallons)* |

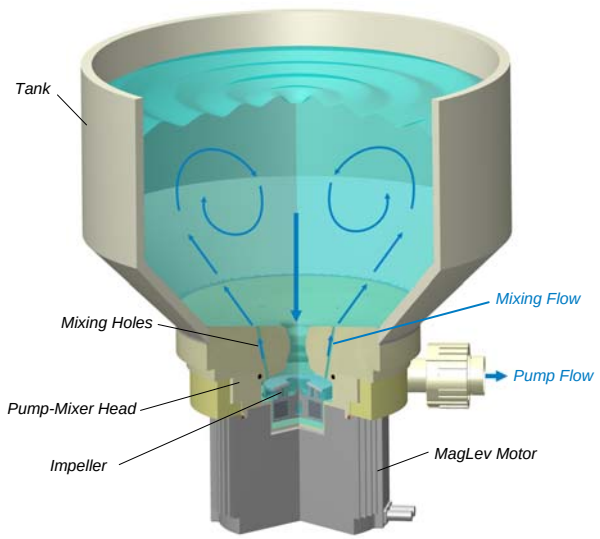


***Figure 1:*** *Maglev pump motor with pump mixer*

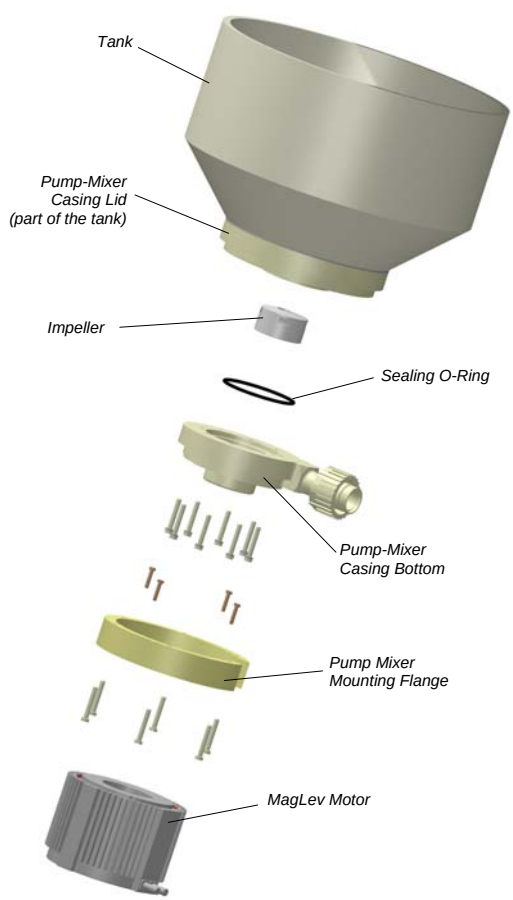


***Figure 2:*** *Disassembled pump mixer*

## *REVOLUTIONARY MAGNETICALLY LEVITATED PUMP MIXER*

The *PTM* pump mixer is a revolutionary device which combines mixing and pumping in one single device (see *Figure 1*). The system has no bearings to wear out, or seals to fail. Based on the principles of magnetic levitation, an impeller is suspended, contact-free, inside a sealed casing and is driven by the magnetic field of the motor. The impeller and casing are both fabricated from chemical-resistant high purity fluorocarbon resins. Fluid flow rate and pressure are precisely controlled by electronically regulating the impeller speed. The mixing flow depends on the impeller speed, and on the number and size of the mixing holes (see *Figure 3*, *Figure 4* and *Figure 5*).

*Figure 1* and *Figure 2* illustrate the concept of the system. The pump mixer head comes delivered with an impeller, casing bottom and a flange to mount the head to the tank. Design specifications for the casing lid, which is part of the tank, can be requested at Levitronix®. Three system sizes are available for mixing up to 400 liter (106 gallons) tanks, delivering flows up to 140 lpm (37 gpm) and pressures up to 3.9 bar (56.5 psi).

### SYSTEM BENEFITS

- Compact design.
- Extremely low particle generation due to the absence of mechanically contacting parts.
- Increased equipment uptime.
- Lower maintenance costs by eliminating valves, bearings, rotating seals and costly rebuilds.
- Reduced risk of contamination due to the self-contained design with magnetic bearings.
- Very gentle to sensitive fluids due to low-shear design.
- No narrow gaps and fissures where particles or microorganisms could be become entrapped.
- Smooth, continuous flow without pressure pulsation.
- Electronic speed control.
- Proven technology in medical and semiconductor industry (MTBF > 30 years).

### APPLICATIONS

- Semiconductor wet processing.
- CMP slurry handling.
- Solar cell production.
- Flat panel display manufacturing.
- Hard-disk fabrication.

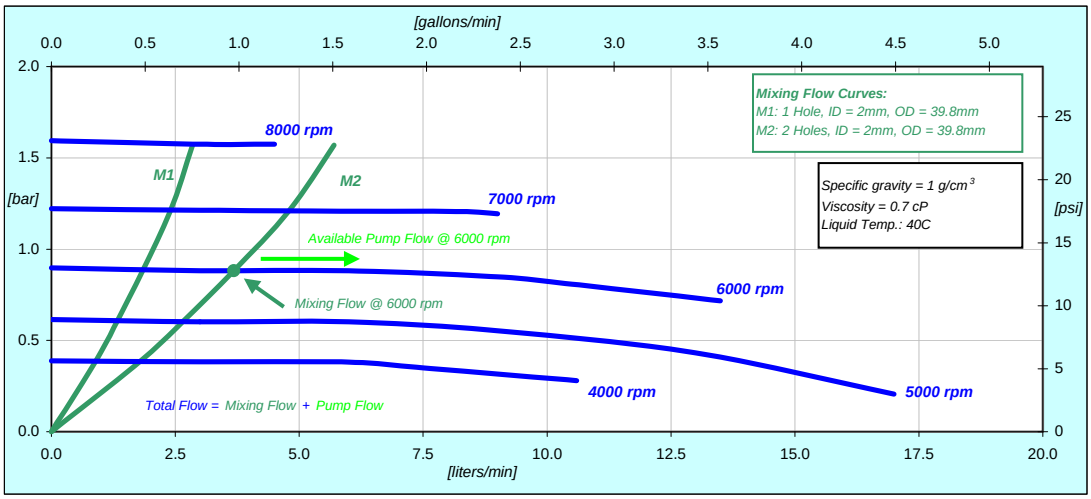


***Figure 3:*** *Mixing-pumping pressure flow chart of PTM-1*

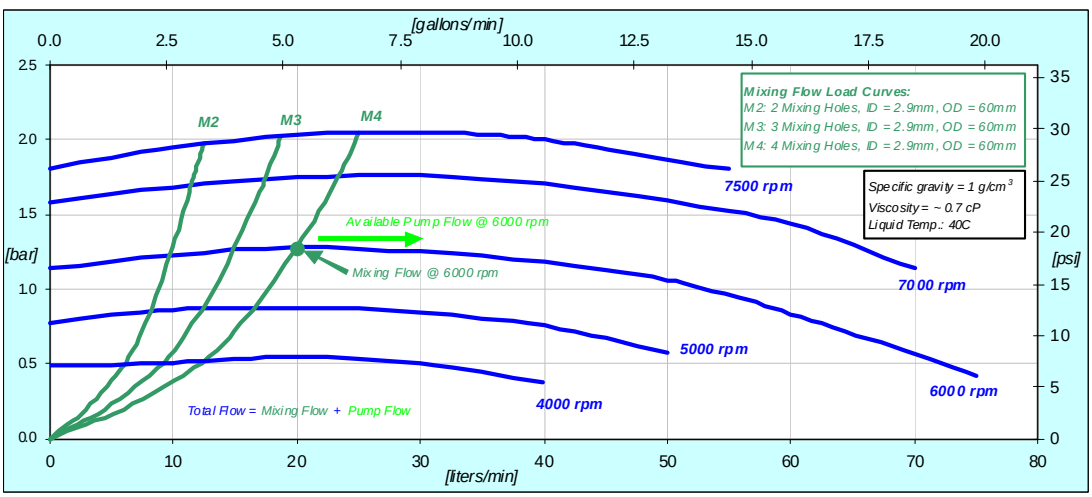


***Figure 4:*** *Mixing-pumping pressure flow chart of PTM-3*

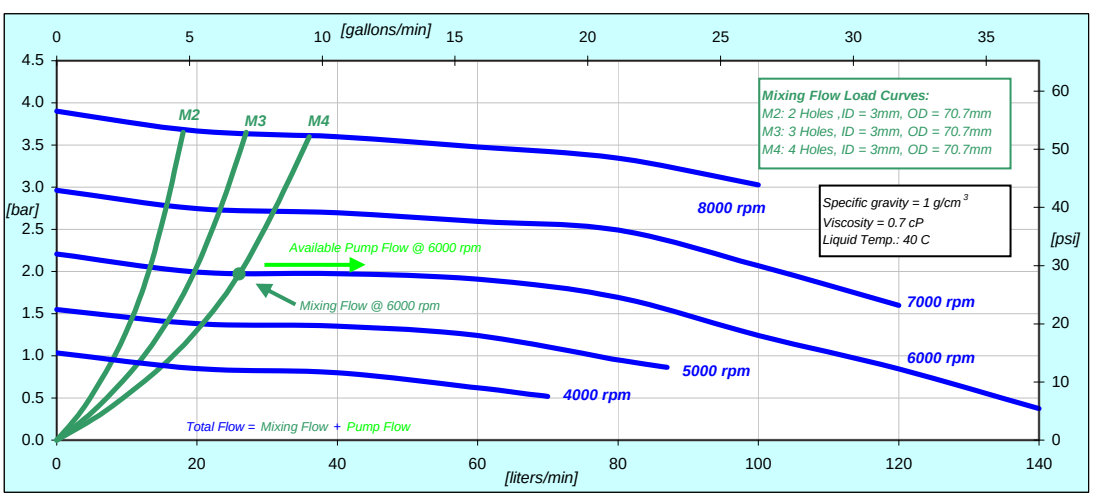


***Figure 5:*** *Mixing-pumping pressure flow chart of PTM-4*

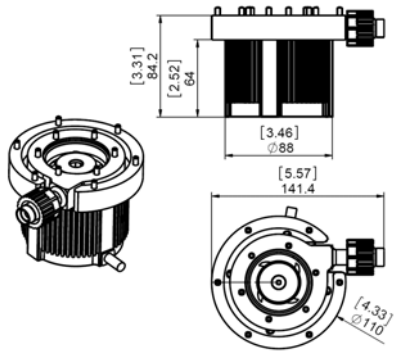


***Figure 6:*** *Dimensions of motor BSM-1 with pump-mixer head CP-1.1 (PTM-1)*

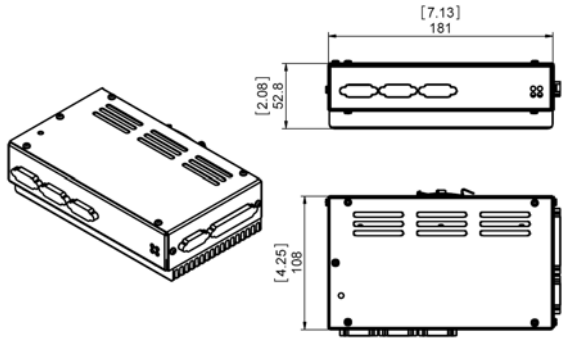


***Figure 7:*** *Dimensions of LC24 controller (for PTM-1 pump mixer system)*

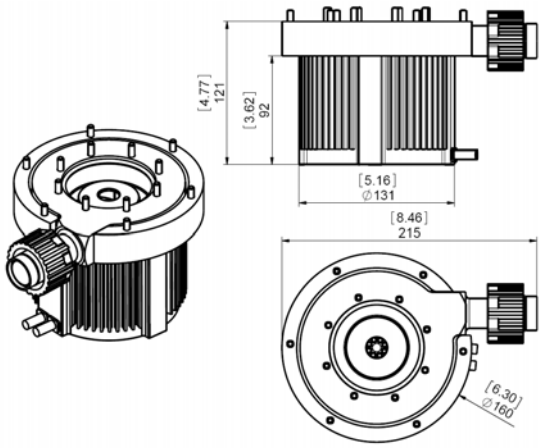


***Figure 8:*** *Dimensions of motor BSM-3 with pump-mixer head CP-3.1 (PTM-3)*

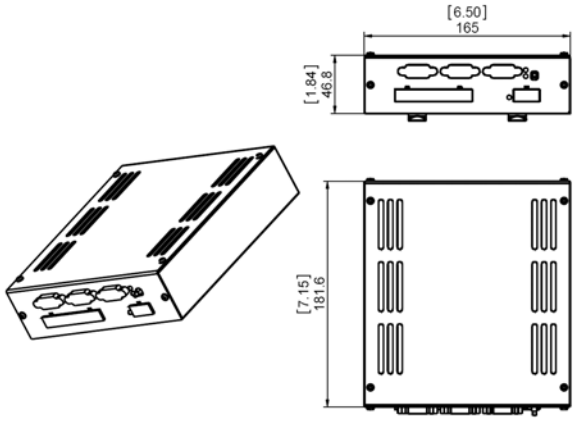


***Figure 9:*** *Dimensions of LC48 controller (for PTM-3 pump mixer system)*

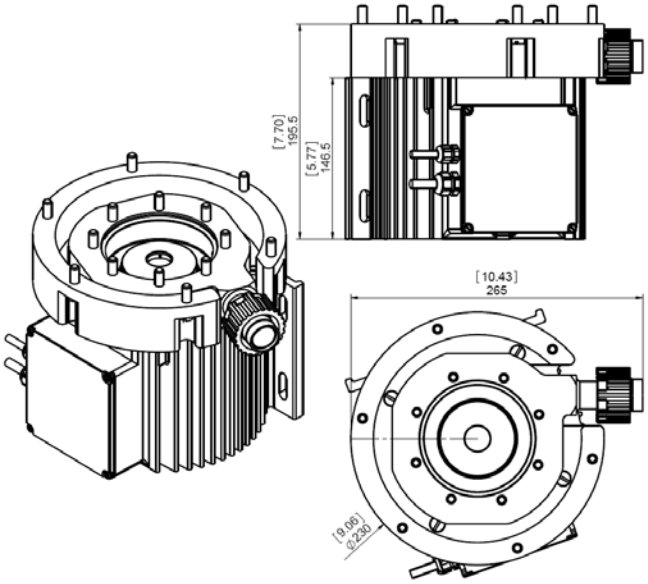


***Figure 10:*** *Dimensions of motor BSM-4 with pump-mixer head CP-4.1 (PTM-4)*

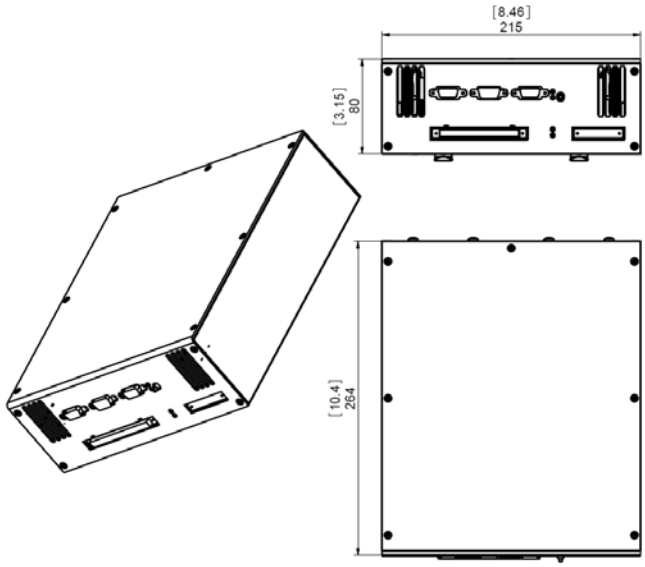


***Figure 11:*** *Dimensions of controller LC325 (for PTM-4 pump mixer system)*

| System Name | Article # | Pump Mixer Head | Motor | Controller | Note |
|---|---|---|---|---|---|
| PTM-1.1 | 100-90330 | CPM-1.1 | BSM-1.4 | LC24 | *- Motor with direct cable connection to controller (doesn't need adaptor cables)*<br>*- Other accessories to be ordered according to Table 3* |
| PTM-3.1 | 100-90329 | CPM-3.1 | BSM-3.2 | LC48 | |
| PTM-4.1 | 100-90331 | CPM-4.1 | BSM-4.1 | LC325 | |
| PTM-1.2 | 100-90342 | CPM-1.1 | BSM-1.3 | LC24 | *- Adaptor/Extension cable (0.5 - 10m) have to be ordered as separate article according to Table 3*<br>*- Other accessories to be ordered according to Table 3* |
| PTM-3.2 | 100-90343 | CPM-3.1 | BSM-3.4-30 | LC48 | |
| PTM-4.2 | 100-90344 | CPM-4.1 | BSM-4.2-30 | LC325 | |

***Table 1:*** *Standard system configurations*

| Pos. | Part | Characteristics | Pump Mixer *PTM-1* | Pump Mixer *PTM-3* | Pump Mixer *PTM-4* |
|---|---|---|---|---|---|
| 1 | **Pump Mixer Head** | Part Name / Article # | *CPM-1.1 / 100-90266* | *CPM-3.1 / 100-90241* | *CPM-4.1 / 100-90267* |
| | | Materials:<br>Impeller / Pump Casing<br>Sealing O-Ring<br>Mounting Flange | *PFA / PTFE*<br>*Perfluoroelastomer*<br>*PVDF* | *PFA / PTFE*<br>*Perfluoroelastomer*<br>*PVDF* | *PFA / PTFE*<br>*Perfluoroelastomer*<br>*PVDF* |
| | | Outlet Fitting | *½" Pillar Super 300* | *1" Pillar Super 300* | *1" Pillar Super 300* |
| | | Max. Pump Flow<br>Max. Outlet Pressure<br>Max. Liquid Temp. | *17 lpm (4.5 gpm)*<br>*1.6 bar (23.2 psi)*<br>*90 $^0$C / 194 $^0$F* | *75 lpm (19.8 gpm)*<br>*2 bar (29 psi)*<br>*90 $^0$C / 194 $^0$F* | *140 lpm (37 gpm)*<br>*3.9 bar (56.5 psi)*<br>*90 $^0$C / 194 $^0$F* |
| | | For Tank Size | *Up to 100 Liter (26.5 gallons)* | *Up to 200 Liter (53 gallons)* | *Up to 400 Liter (106 gallons)* |
| | | Flange Specifications for Tank Design | *Drawing #: RM-2127-05* | *Drawing #: RM-2105-05* | *Drawing #: RM-2128-04* |
| 2a | **Motor** *(with extension cable concept to controller, see Table 3)* | Part Name / Article # | *BSM-1.3 / 100-10004* | *BSM-3.4-30 / 100-10015* | *BSM-4.2-30 / 100-10011* |
| | | Housing | *ETFE coated Aluminum, waterproofed (IP-67)* | | |
| | | Cable<br>Connector | *1 cable, 2m, FEP jacket*<br>*1x circular (metallic, IP-67)* | *2 cables, 3m, FEP jacket*<br>*2x circular (metallic, IP-67)* | *2 cables, 3m, FEP jacket*<br>*2x circular (metallic, IP-67)* |
| 2b | **Motor** *(direct cable connection to controller)* | Part Name / Article # | *BSM-1.4 / 100-10005* | *BSM-3.2 / 100-10001* | *BSM-4.1 / 100-10007* |
| | | Cable<br>Connector | *1 cable, 5m, FEP jacket*<br>*D-SUB* | *2 cables, 6m, FEP jacket*<br>*D-SUB / COMBICON* | *2 cables, 6m, FEP jacket*<br>*D-SUB / COMBICON* |
| 3 | **Controller** | Part Name / Article # | *LC24 / 100-30001* | *LC48 / 100-30002* | *LC325 / 100-30003* |
| | | Input Power / Voltage | *120 W / 24 V DC* | *600 W / 48 V DC* | *1.5 kW / 200-230V AC*<br>*(1 and 3-phase)* |
| | | Interfaces | *PLC (needs PLC Module according to Table 3), RS232* | | |

***Table 2:*** *Specifications of standard components*

| Pos. | Part | Characteristics | Pump System *BPS-1* | Pump System *BPS-3* | Pump System *BPS-4* |
|---|---|---|---|---|---|
| 4 (a,b) | **Extension Cable for Sensor and Power** | Part Name<br>(length = YY x 100mm) | *MCA-1.1-YY*<br>*(only one cable)* | *MCAP-3.1-YY (Power cable)*<br>*MCAS-3.1-YY (Sensor cable)* | *MCAP-4.1-YY (Power cable)*<br>*MCAS-3.1-YY (Sensor cable)* |
| | | Article Number:<br>0.5m<br>1m<br>3m<br>5m<br>7m<br>10m | *190-10005*<br>*190-10010*<br>*190-10015*<br>*190-10033*<br>*190-10050*<br>*190-10080* | *Power Cable: / Sensor Cable:*<br>*190-10011 / 190-10013*<br>*190-10078 / 190-10077*<br>*190-10012 / 190-10014*<br>*190-10006 / 190-10007*<br>*190-10079 / 190-10039*<br>*190-10066 / 190-10067* | *Power Cable: / Sensor Cable:*<br>*190-10084 / 190-10013*<br>*190-10076 / 190-10077*<br>*190-10023 / 190-10014*<br>*190-10029 / 190-10007*<br>*190-10038 / 190-10039*<br>*190-10075 / 190-10067* |
| | | Cable Jacket / Connector | *PUR (polyurethane) / Cicular metallic (Nickel coated, IP-67)* | | |
| 5 | **PLC Module** | Part Name / Article # | *PLC-A.1 / 100-30200* | | |
| | | Digital Inputs / Outputs<br>Analog Inputs / Outputs | *3x 24V DC (typical), galvanic isolated / 3x closing relay (30V, 1A)*<br>*2x 4-20mA, not galvanic isolated / 2x 0-5V, not galvanic isolated* | | |
| 6 | **Panel for Stand-Alone Operation** | Part Name / Article# | *LUI-A.1 / 100-30300* | | |
| | | Interfaces | *RS232* | | |
| 7 | **Impeller Exchange Kits** | Part Name / Article# | *IEK-1.2 / 100-90518* | *IEK-3.5 / 100-90516* | *IEK-4.4 / 100-90519* |
| | | Impeller Type / Material<br>Sealing O-Ring<br>Exchange Tool<br>Pump Mix. Head Screws | *IMP-1.2 / PFA*<br>*Perfluoroeleastomer*<br>*IET-1.1*<br>*4 pcs M3x10, 12 pcs M4x20* | *IMP-3.3 / PFA*<br>*Perfluoroeleastomer*<br>*IET-3.1*<br>*4 pcs M4x20, 14 pcs M5x35* | *IMP-4.2 / PFA*<br>*Perfluoroeleastomer*<br>*IET-3.1*<br>*8x M8x40, 4x M8x20, 6x M8x30* |
| 8 | **Air Cooling Module** | Part Name / Article# | *ACM-1.1 / 190-10003* | *ACM-3.1 / 190-10001* | *ACM-4.1 / 190-10016* |
| | | Material / Air Connection | *PVDF / NPT ¼"* | *PVDF / NPT ¼"* | *PVDF / NPT ¼"* |

***Table 3:*** *Specifications of accessories*

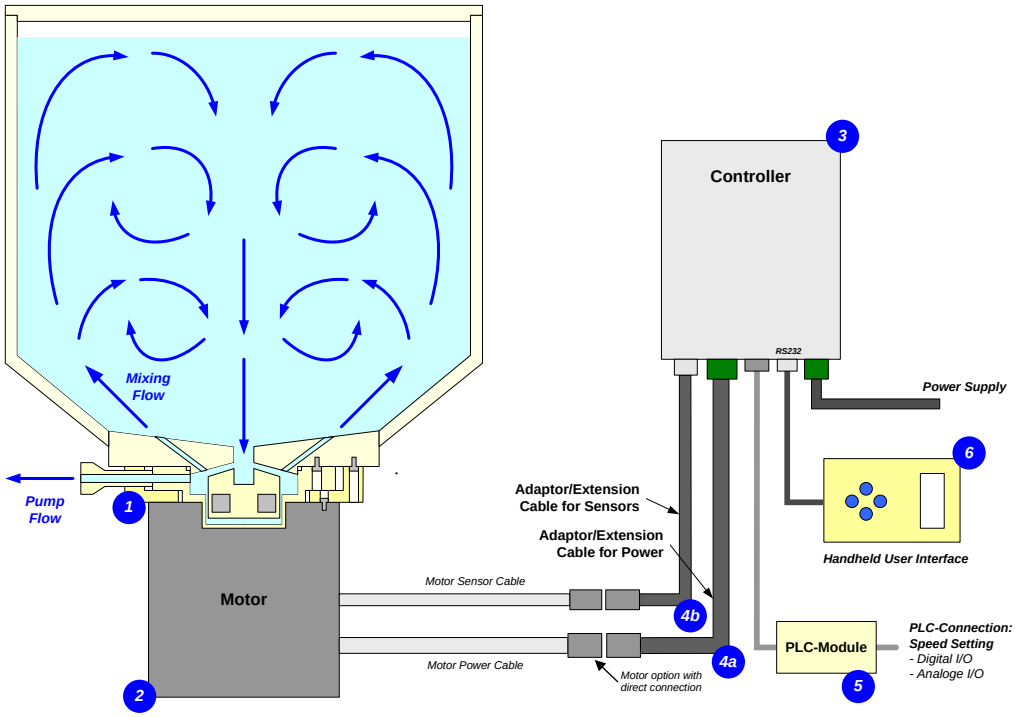


***Figure 12:*** *Components of pump tank mixer family PTM*

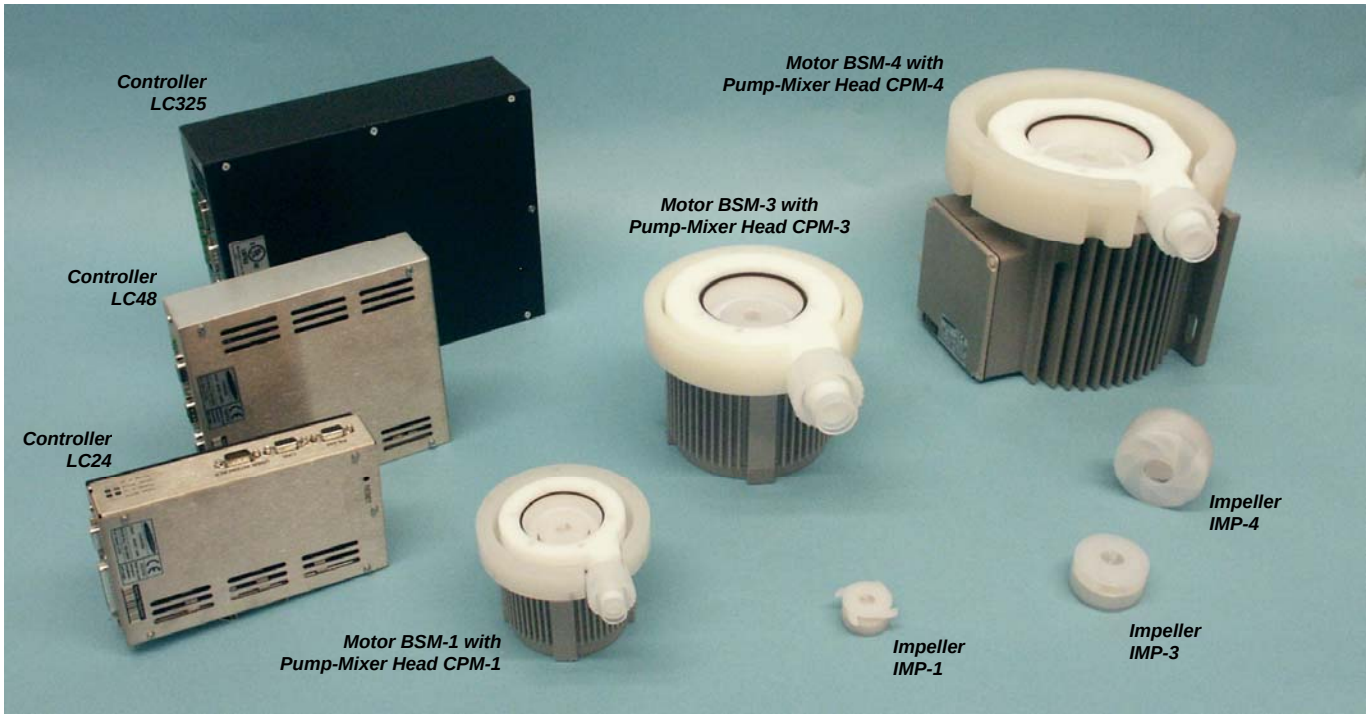


***Figure 13:*** *Basic components of PTM pump mixer family*

**USA:** Levitronix LLC
45 First Avenue, Waltham, Massachusetts 02451
Tel.: +1-781 622 5070, Fax: +1-781 622 5090
Internet: info@levitronix.com, www.levitronix.com

**Europe:** Levitronix GmbH
Technoparkstr. 1, CH-8005 Zürich, Switzerland
Tel.: +41-44-445 19 13, Fax: +41-44-445 19 14
Internet: info@levitronix.com, www.levitronix.com

*PL-2041-00, Rev01, DCO# 09-146*